CHAPTER 1

Introduction to Geometric Dimensioning and Tolerancing

For many in the manufacturing sector, geometric dimensioning and tolerancing is a new subject. During World War II, the United States manufactured and shipped spare parts overseas for the war effort. Many of these parts, even though they were made to specifications, would not assemble. The military recognized that defective parts caused serious problems for military personnel. After the war, a committee representing government, industry, and education spent considerable time and effort investigating this defective parts problem; this group needed to find a way to ensure that parts would fit and function properly every time. The result was the development of geometric dimensioning and tolerancing (GD&T).

Ultimately, the USASI Y14.5–1966 [United States of America Standards Institute—predecessor to the American National Standards Institute (ANSI)] document was produced based on earlier standards and industry practices. The following are revisions to that standard:

- ANSI Y14.5–1973 (American National Standards Institute)
- ANSI Y14.5M–1982
- ASME Y14.5M–1994 (American Society of Mechanical Engineers)
- ASME Y14.5–2009

The 2009 revision is the current, authoritative reference document that specifies the proper application of GD&T.

Most government contractors are now required to generate drawings that are toleranced with GD&T. Because of tighter tolerancing requirements, shorter time to production, and the need to communicate design intent more accurately, many companies other than military suppliers are recognizing the importance of tolerancing their drawings with GD&T.

Conventional tolerancing methods have been in use since the middle of the 1800s. These methods do a good job of dimensioning and tolerancing the size of features and are still used in that capacity today, but they do a poor job of locating and orienting features of size. GD&T is used extensively for tolerancing the size, form, orientation, and location of features. Tolerancing with GD&T has a number of advantages over conventional tolerancing methods; three dramatic advantages are illustrated in this chapter.

The purpose of this introductory chapter is to provide an understanding of what GD&T is, why it was developed, when to use it, and what advantages it has over conventional tolerancing methods. With an understanding of this subject, technical practitioners will be likely to learn the skill of tolerancing with GD&T more effectively; with this new skill, engineers will have a greater understanding of how parts assemble, do a better job of communicating design requirements, and ultimately be able to make a greater contribution to their companies' bottom line.

Chapter Objectives

After completing this chapter, the learner will be able to

- *Define* GD&T
- *Explain* when to use GD&T
- *Identify* three advantages of GD&T over coordinate tolerancing

What Is GD&T?

GD&T is a symbolic language used to specify the size, shape, form, orientation, and location of features on a part. Features toleranced with GD&T reflect the actual relationship between mating parts. Drawings with properly applied geometric tolerancing provide the best opportunity for uniform interpretation and cost-effective assembly. GD&T was created to ensure the proper assembly of mating parts, to improve quality, and to reduce cost.

GD&T is a design tool. Before designers can apply geometric tolerancing properly, they must carefully consider the fit and function of each feature of every part. GD&T, in effect, serves as a checklist to remind the designer to consider all aspects of each feature. Properly applied geometric tolerancing ensures that every part will assemble every time. Geometric tolerancing allows the designer to specify the maximum available tolerance and, consequently, design the most economical parts.

GD&T communicates design requirements. This tolerancing scheme identifies all applicable datum features, which are reference surfaces, and the features being controlled to these datum features. A properly toleranced drawing is a picture that not only communicates the size and shape of the part but also tells a story that explains the tolerance relationships between features.

When Should GD&T Be Used?

Many designers ask, "When should I use GD&T?" Because GD&T was designed to position features of size, the simplest answer is to locate all features of size with GD&T controls. Designers should tolerance parts with GD&T when

- Drawing delineation and interpretation need to be the same
- Features are critical to function or interchangeability
- It is important to stop scrapping perfectly good parts
- It is important to reduce drawing changes

- Automated equipment is used
- Functional gaging is required
- It is important to increase productivity
- Companies want across the board savings

Advantages of GD&T Over Coordinate Dimensioning and Tolerancing

Since the middle of the nineteenth century, industry has been using the plus or minus tolerancing system for tolerancing drawings. This system has several limitations:

- The plus or minus tolerancing system generates rectangular tolerance zones. A *tolerance zone*, shown in the example in Fig. 1-1, is a rectangular boundary within which the axis of a feature that is in tolerance must lie. Rectangular tolerance zones do not have a uniform distance from the center to the outer edge. In the figure, from left to right and top to bottom, the tolerance is ± .005; across the diagonals, the tolerance is ± .007. Therefore, when designers tolerance features with a plus or minus .005 tolerance, they must tolerance the mating parts to accept a ± .007 tolerance, which exists across the diagonals of the tolerance zones.
- Size features can be specified only at the regardless of feature size condition. *Regardless of feature size* means that the location tolerance remains the same no matter what size the feature happens to be within its size tolerance. If a hole such as the one in Fig. 1-1 increases in size, it has more location tolerance, but with the plus and minus tolerancing system, there is no way to take advantage of that additional tolerance.
- Datum features usually are not specified where the plus or minus tolerancing system is used. Consequently, machinists and inspectors don't know which datum features apply or in what order they apply. In Fig. 1-1, measurements are taken from the lower and left sides of the part. The fact that measurements are taken from these sides indicates that they are datum features. However, since these datum features are not specified, they are called *implied datum features*.

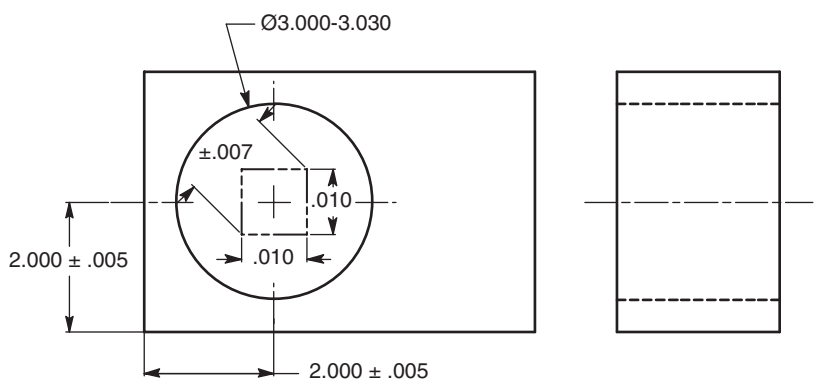

Figure 1-1 The traditional plus or minus tolerancing system. The axis of the 3-inch hole must fall inside the .010-square tolerance zone.

Where datum features are implied, the designer has not indicated which datum feature is more important and has not specified whether or not a third datum feature is included. It would be logical to assume that a third datum feature does exist because the datum reference frame consists of three mutually perpendicular planes, even though a third datum feature is not implied.

When locating features with GD&T, there are three important advantages over the coordinate tolerancing system:

- The cylindrical tolerance zone
- The maximum material condition
- Datum features specified in order of precedence

The Cylindrical Tolerance Zone

The cylindrical tolerance zone is located and oriented to a specified datum reference frame. In Fig. 1-2, the tolerance zone is oriented perpendicular to datum plane A and located with basic dimensions to datum planes B and C. Basic dimensions have no tolerance directly associated with the dimension, consequently eliminating undesirable tolerance stack-up. The cylindrical tolerance zone easily controls the orientation, perpendicularity in Fig. 1-2, of the axis because the tolerance zone extends through the entire length of the feature.

Unlike the rectangular tolerance zone, the cylindrical tolerance zone defines a uniform distance from true position, the theoretically perfect center of the hole, to the tolerance zone boundary. When a .014-diameter cylindrical tolerance zone is specified about

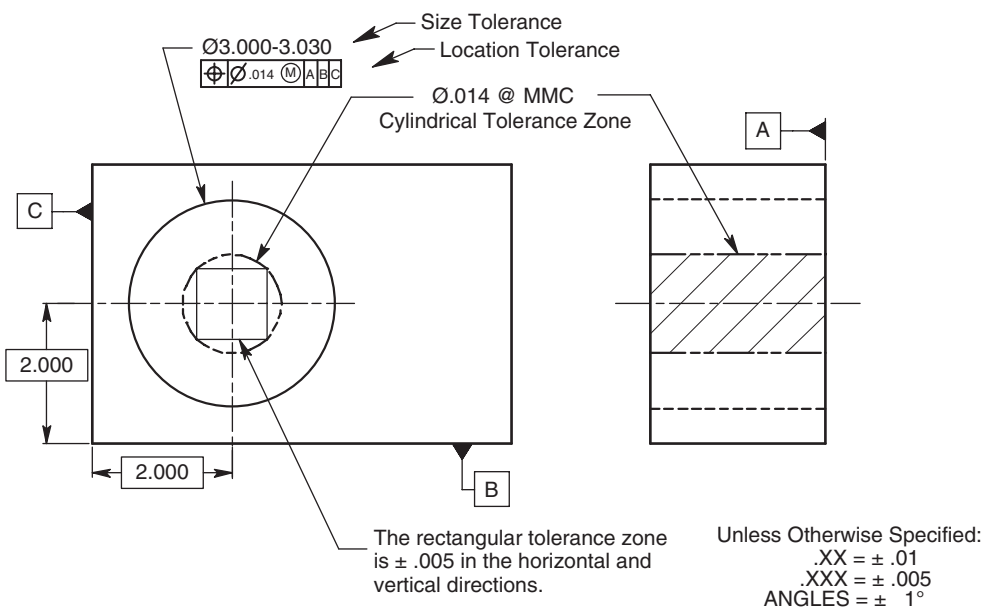

FIGURE 1-2 The cylindrical tolerance zone compared with the rectangular tolerance zone.

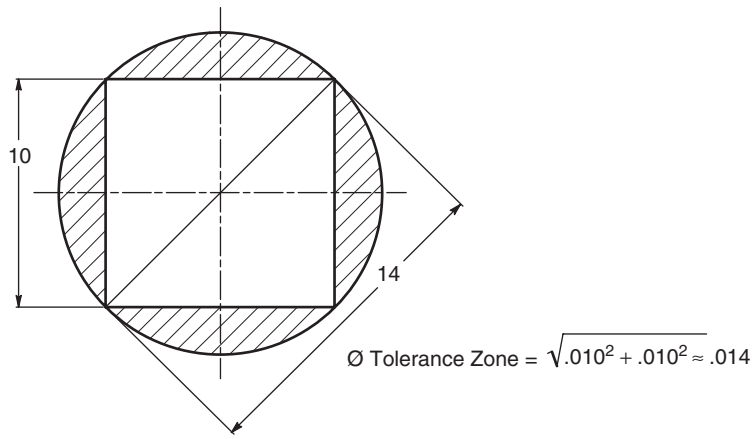

FIGURE 1-3 A cylindrical tolerance zone provides a uniform distance from the axis to the edge.

true position, there is a tolerance if .007 from true position in all directions. A cylindrical tolerance zone circumscribed about a square tolerance zone such as the one in Fig. 1-3 has 57% more area than the square in which the actual axis of the feature may lie.

The Maximum Material Condition Modifier

The maximum material condition symbol (circle M) in the feature control frame is a modifier. It specifies that as the hole in Fig. 1-2 increases in size, a bonus tolerance is added to the tolerance in the feature control frame.

The limit tolerance in Fig. 1-4 indicates that the hole size can be as small as 3.000 in diameter (maximum material condition) and as large as 3.030 in diameter (least material condition). The geometric tolerance specifies that the hole be positioned with a cylindrical tolerance zone of .014 in diameter when the hole is produced at its maximum material condition. The tolerance zone is oriented perpendicular to datum plane A and located with basic dimensions to datum planes B and C. As the hole size in Fig. 1-2 departs from maximum material condition toward least material condition, additional location tolerance, called *bonus tolerance*, is allowed in the exact amount of such departure. If the hole specified by the feature control frame in Fig. 1-4 is actually produced at a diameter of 3.020, the total available tolerance is a diameter of .034.

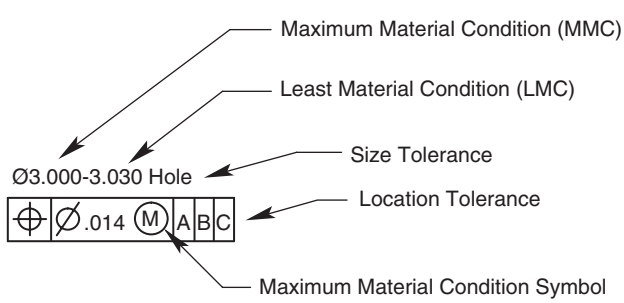

FIGURE 1-4 The size, size tolerance, and feature control frame for the hole in Fig. 1-2.

	Actual mating envelope	3.020
minus	Maximum material condition	–3.000
	Bonus tolerance	.020
plus	Geometric tolerance	+.014
	Total positional tolerance	.034

The maximum material condition modifier allows the designer to capture all the available tolerance.

Datum Features Specified in Order of Precedence

Datum features are not specified on drawings toleranced with the coordinate dimensioning system. The lower and left edges on the drawing in Fig. 1-5 are *implied datum features* because the holes are dimensioned from these edges. But which datum feature is more important, and is a third datum plane included in the datum reference frame? A rectangular part such as this is usually placed in a datum reference frame consisting of three mutually perpendicular intersecting planes. When datum features are not specified, machinists and inspectors are forced to make assumptions that could be very costly.

The parts placed in the datum reference frames in Fig. 1-6 show two interpretations of the drawing in Fig. 1-5. With the traditional method of tolerancing, it is not clear whether the lower edge of the part should be resting against the horizontal surface of the datum reference frame, as in Fig. 1-6*A*, or if the left edge of the part should be contacting the vertical surface of the datum reference frame, as in Fig. 1-6*B*.

Manufactured parts are not perfect. It is clear that when drawings are dimensioned with traditional tolerancing methods, a considerable amount of information is left to the machinists' and inspectors' judgment. If a part is to be inspected the same way every time, the drawing must specify how the part is to fit in the datum reference frame. Each datum feature must be specified in the feature control frame in its proper order of precedence.

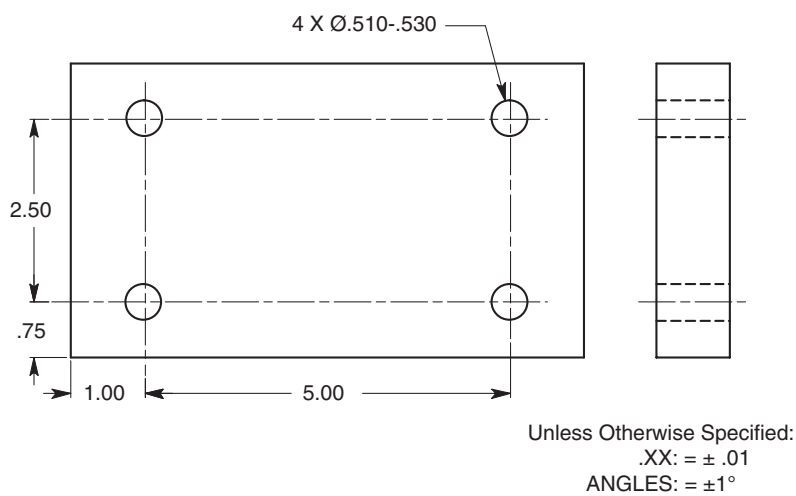

Figure 1-5 No datum features are specified on this drawing.

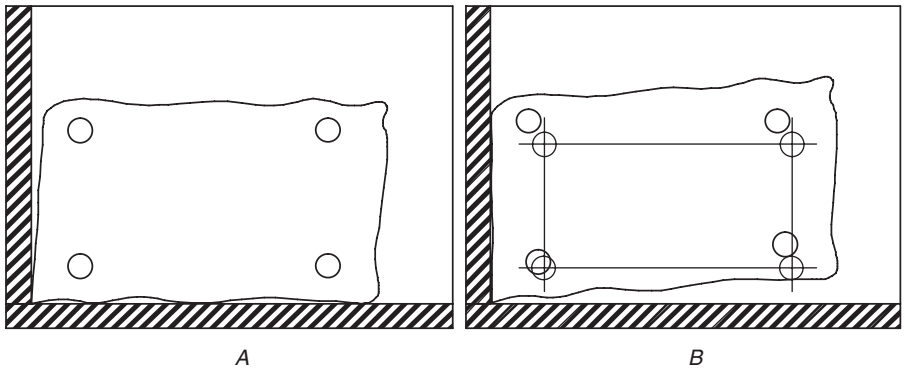

FIGURE 1-6 Possible datum feature interpretation of the drawing in Fig. 1-5.

Summary

- GD&T is a symbolic language used to specify the size, shape, form, orientation, and location of features on a part.
- GD&T was created to ensure the proper assembly of mating parts, to improve quality, and to reduce cost.
- GD&T is a design tool.
- GD&T communicates design requirements.
- This text is based on the standard, *Dimensioning and Tolerancing* ASME Y14.5–2009.
- The cylindrical tolerance zone defines a uniform distance from true position to the tolerance zone boundary.
- The maximum material condition symbol in the feature control frame is a modifier that allows a bonus tolerance.
- Each datum feature must be specified in order of precedence.

Chapter Review

1. Geometric dimensioning and tolerancing is a symbolic language used to specify the _____ , _____ , _____ , _____, and _____ of features on a part.
2. Features toleranced with GD&T reflect the _____ between mating parts.
3. GD&T was designed to ensure the proper assembly of _____ _____, to improve _____, and to reduce _____.
4. Geometric tolerancing allows the maximum available _____ and, consequently, the most _____ parts.
5. _____ is the current, authoritative reference document that specifies the proper application of GD&T.

6. Plus or minus tolerancing generates a _____-shaped tolerance zone.
7. _____ generates a cylindrical-shaped tolerance zone to control an axis.
8. If the distance across a square tolerance zone is ± .005 or a total of .010, what is the approximate distance across the diagonal?_____
9. Bonus tolerance equals the difference between the actual mating envelope size and the _____.
10. While processing, a rectangular part usually rests against a _____ _____ consisting of three mutually perpendicular intersecting planes.